SUITABLE FOR HOLDEN COLORADO / ISUZU D-MAX DUAL CAB 2012+ TRACK MOUNT HEAVY DUTY PLATFORM FIT SYSTEM

MAX VEHICLE ROOF LOAD RATING: 100 KG

TOTAL LOAD EQUALS WEIGHT OF ROOF RACKS + ACCESSORIES + CARGO

FIRST TIME INSTALLATION

- Please read instructions carefully before installation.
- Check the contents of kit. Contact your dealer if any parts appear missing or damaged.
- Clean your roof thoroughly prior to fitting the Track Mount Heavy Duty Platform System.
- Place these instructions in the vehicle's glove box after installation is complete.

LEG PACK AND PLATFORM SOLD SEPARATELY

TOOLS REQUIRED:

- Pencil
- Tape Measure
- Masking Tape
- 3 mm Drill Bit
- 7 mm Drill Bit
- Drill Bit Stop
- Rivet Gun
- Tin Snips
- Metal File
- Vacuum Cleaner
- Power or Cordless Drill
- Mastic Silicone Sealant
- Flat Blade Screwdriver
- Zinc Rich Cold Galvanising Coating
- 10 mm Open Ended Spanner
- 13 mm Socket or Spanner
- Torque Wrench (Optional)
- Die Grinder (D-Max SX only)

KIT CONTENTS

ITEM	COMPONENT	QTY	ITEM	COMPONENT	QTY
1.	Track for Colorado/D-Max Right Hand Side	x1	8.	M6 Hex Screw	x8
2.	Track for Colorado/D-Max Left Hand Side	x1	9.	Track End Cap	x4
3.	Track Nut Plate	x4	10.	M8 Button Head Screw	x8
4.	M6 Washer	x8	11.	M8 Spring Washer	x8
5.	M6 Spring Washer	x8	12.	M8 Washer	x8
6.	Rivet	x8	13.	5 mm Allen Key	x1
7.	4.9 mm Drill Bit	x1			

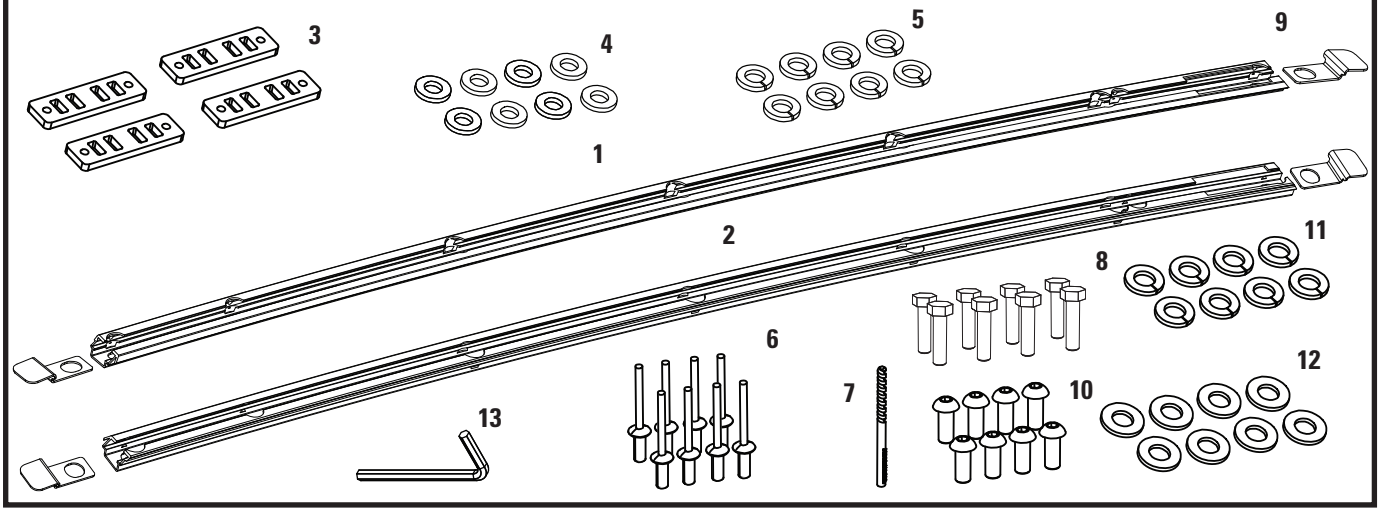

TRACK INSTALLATION

1 ASSEMBLE PLATFORM

Assemble Kings Platform according to the Platform Assembly instructions.

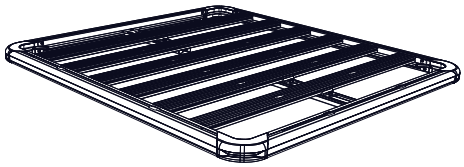

2 BEFORE BEGINNING INSTALLATION

Clean roof thoroughly and allow to dry before beginning installation.

3 TRACK ORIENTATION

The foam tape on side of Tracks faces **outside of vehicle** as shown, with rectangular cut outs at rear of vehicle.

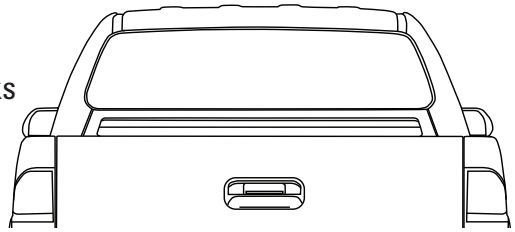

NOTE - image as viewed from rear of vehicle

4 TRACK SET-UP

It is recommended to completely install one track at a time.

For Holden Colorado / Isuzu D-Max LS, LS-U, LS-M

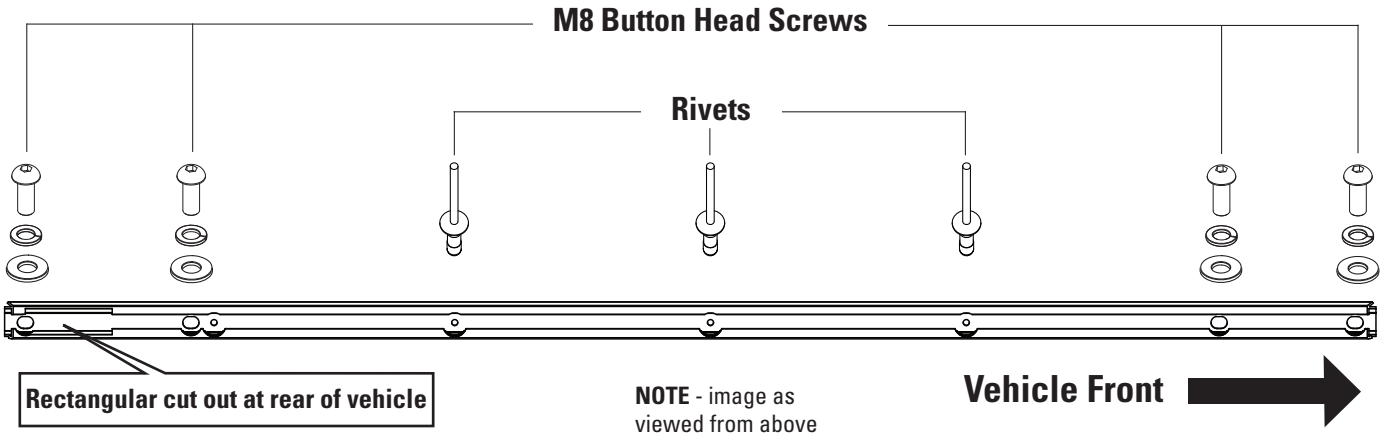

NOTE - image as viewed from above

For Isuzu D-Max SX

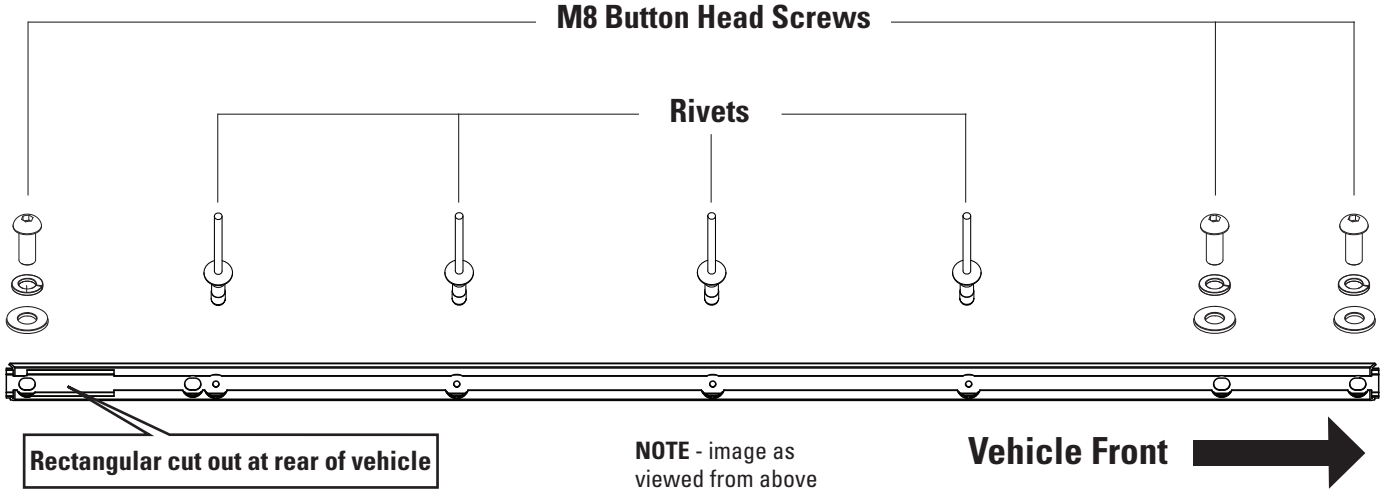

NOTE - image as viewed from above

5 MEASURE ROOF TRIM

Using a Tape Measure, measure 1420 mm from the edge of the windscreen rubber (not glass edge) back along rubber roof channel trim. Ensure to measure from the centre of roof trim as shown. Use a pencil to mark measurement at 1420 mm and another at 230 mm.

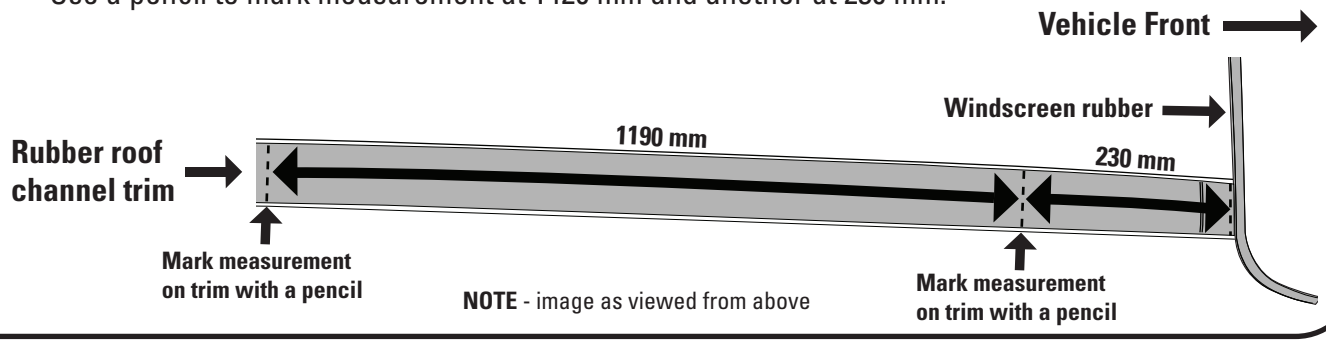

6 DRILL ROOF TRIM

The measurements can now be carefully drilled through using a 3 mm Drill Bit (not supplied) by drilling three holes through the trim at the two marked locations. The trim has a stainless steel section inside. **Do not drill into the roof.**

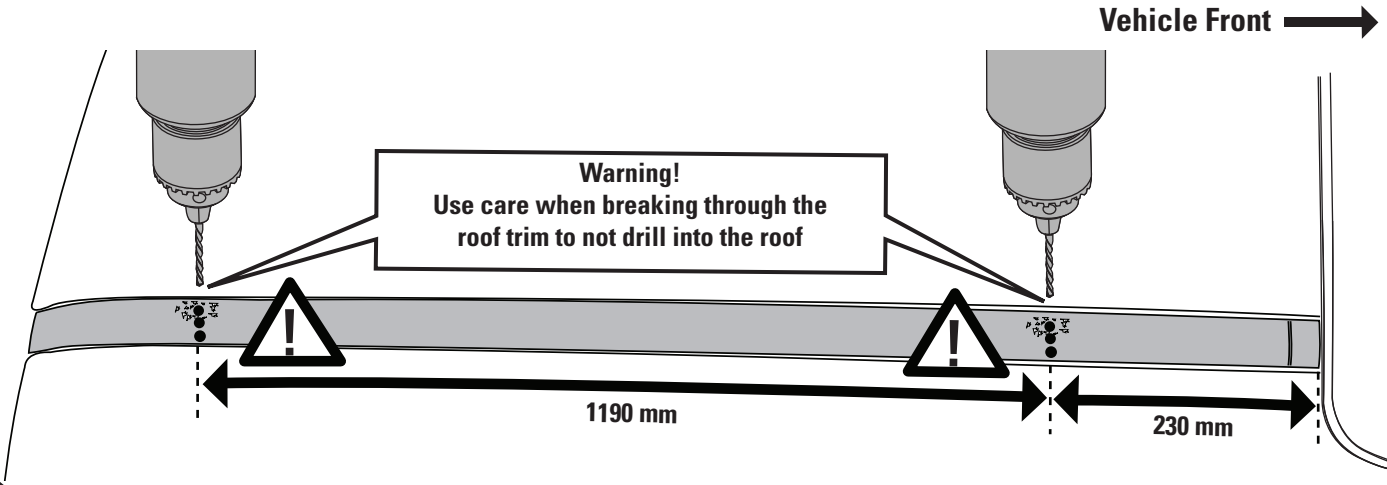

7 CUT ROOF TRIM

To protect paint work, place Masking Tape over middle of roof as shown. Gently lever up the middle of rubber roof channel trim with a Flat Blade Screwdriver (wrap tape around end of Screwdriver to prevent paint scratching). Use Tin Snips to cut through middle of trim.

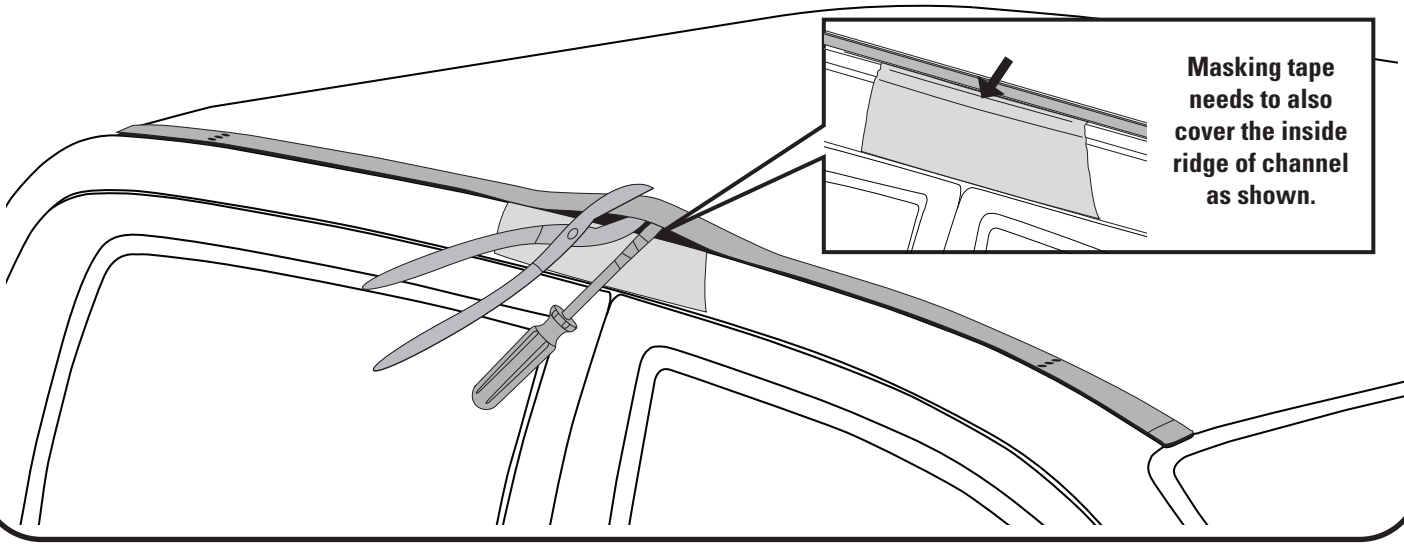

8 BREAK ROOF TRIM

Using your thumb to support trim at drilled holes, bend the cut trim sections back and forth to break at drilled holes. Some force may be required to snap the stainless steel section in trim.

Neaten edges where trim has broken as much as possible.

Remove all Tape from vehicle roof.

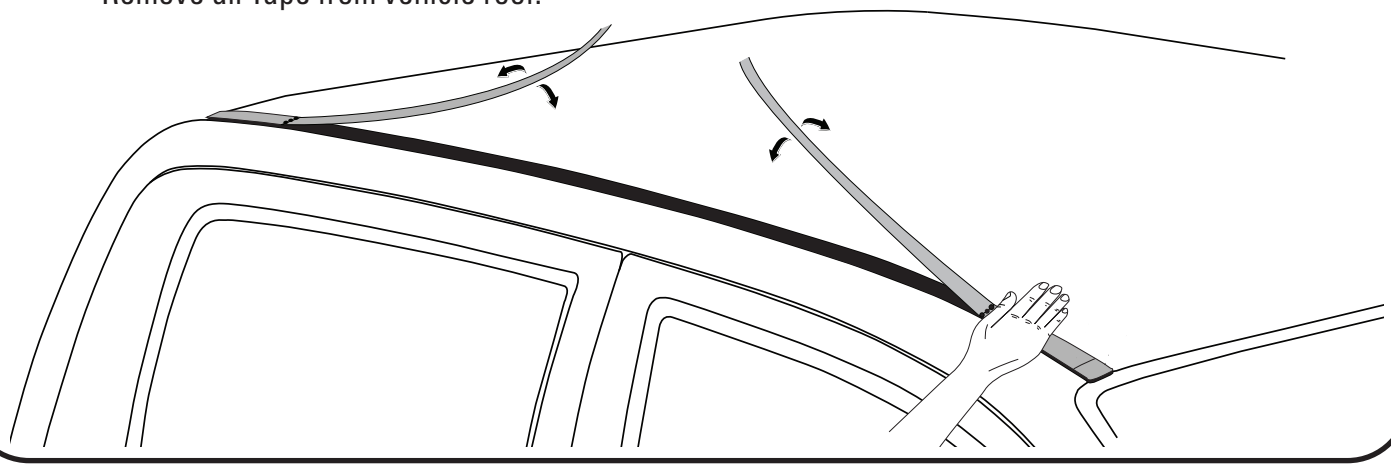

9 REVEAL MOUNTING POINTS

With the trim pieces removed, the M8 mounting points can now be accessed. The mounting points are covered with paint and tape. Use a sharp tool to remove paint and peel away tape covering holes to reveal screw thread. If the roof panel overlaps the hole and impedes on accessing the thread, carefully file the roof panel to allow clearance for inserting the M8 Button Head Screws.

NOTE - Isuzu D-Max SX Models do not feature a third (#3) mounting point. Proceed to Page 9 for supplement fitting instructions for D-Max SX.

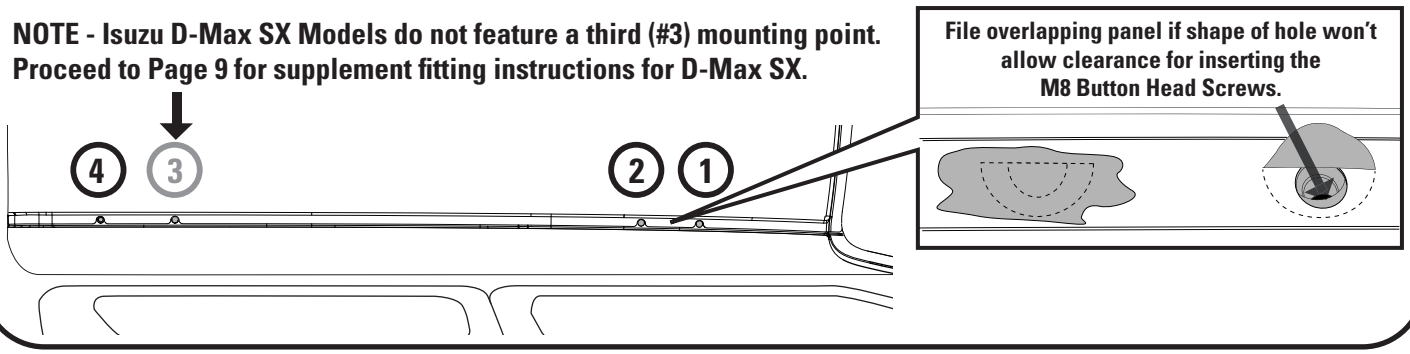

10 ALIGN AND SECURE TRACK

Place Track into roof channel, ensuring Track orientation is correct as shown.
Align Track and eliminate movement within the roof channel during spot drilling by inserting M8 Button Head Screws into each of the mounting holes through track.
Secure using the supplied Allen Key.
For Isuzu D-Max SX models, secure using holes 1, 2 and 4.

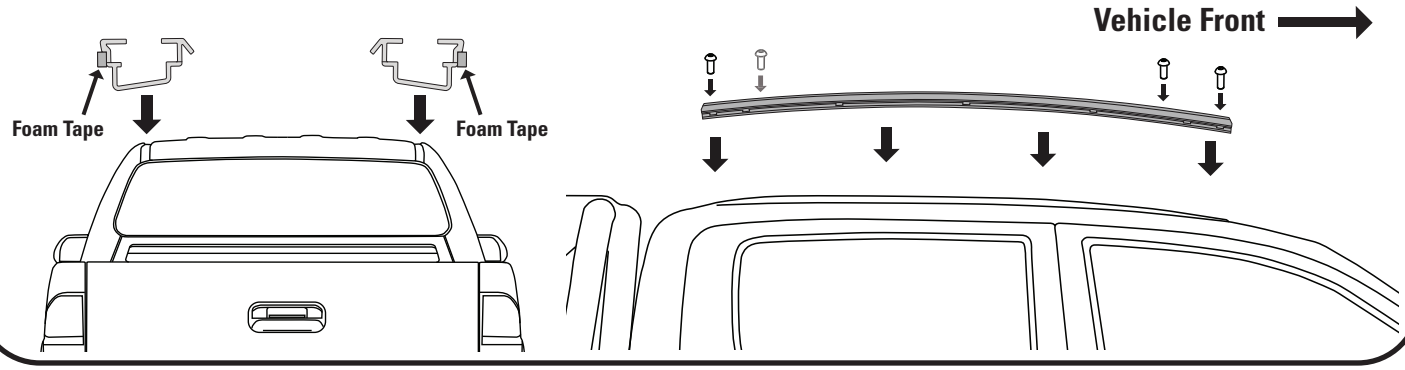

11 SPOT DRILL RIVET HOLES

Using the supplied 4.9 mm Drill Bit, drill each of the applicable rivet holes as shown below. **Start from the rear of the vehicle working consecutively frontward.** Ensure the Track does not move during this process by maintaining downward pressure on the Track while spot drilling holes. Use the help of an assistant if required. Once complete, remove Track taking care not to scratch vehicle.

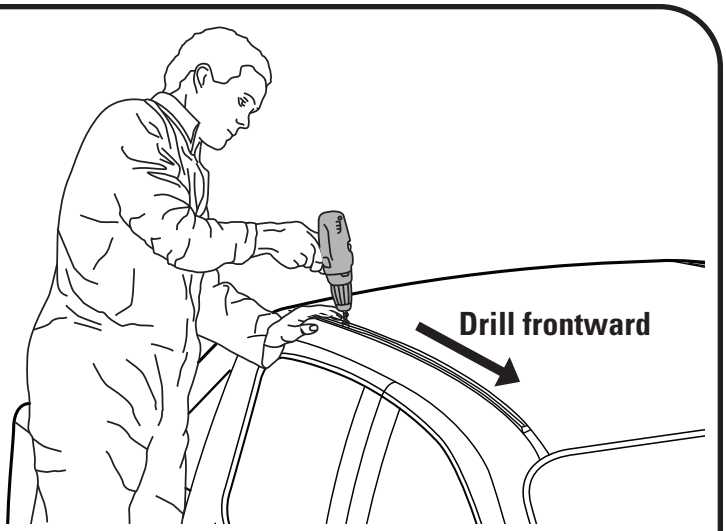

For Holden Colorado / Isuzu D-Max LS, LS-U, LS-M

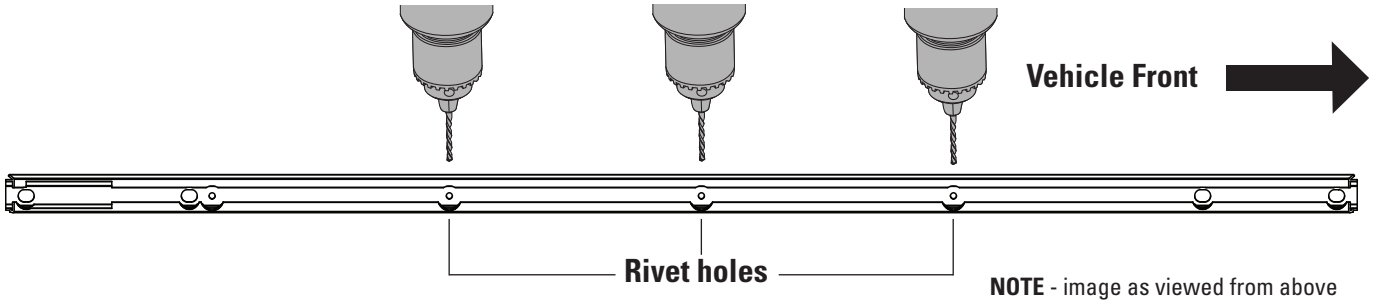

NOTE - image as viewed from above

For Isuzu D-Max SX

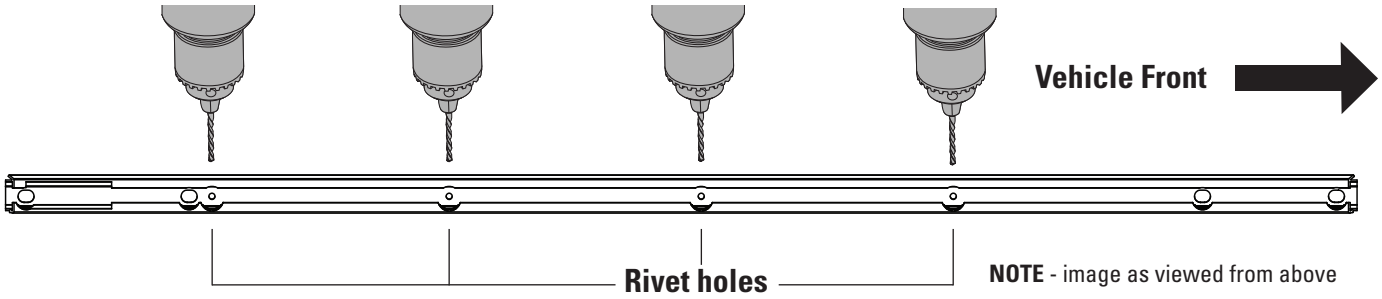

NOTE - image as viewed from above

12 DRILL ROOF CHANNEL

All rivet holes can now be carefully drilled through. **To avoid drilling into roof lining a drill stop must be used.** The roof skin is approx. 2-3 mm thick. **Ensure that a drilling angle perpendicular to the roof angle is maintained.**

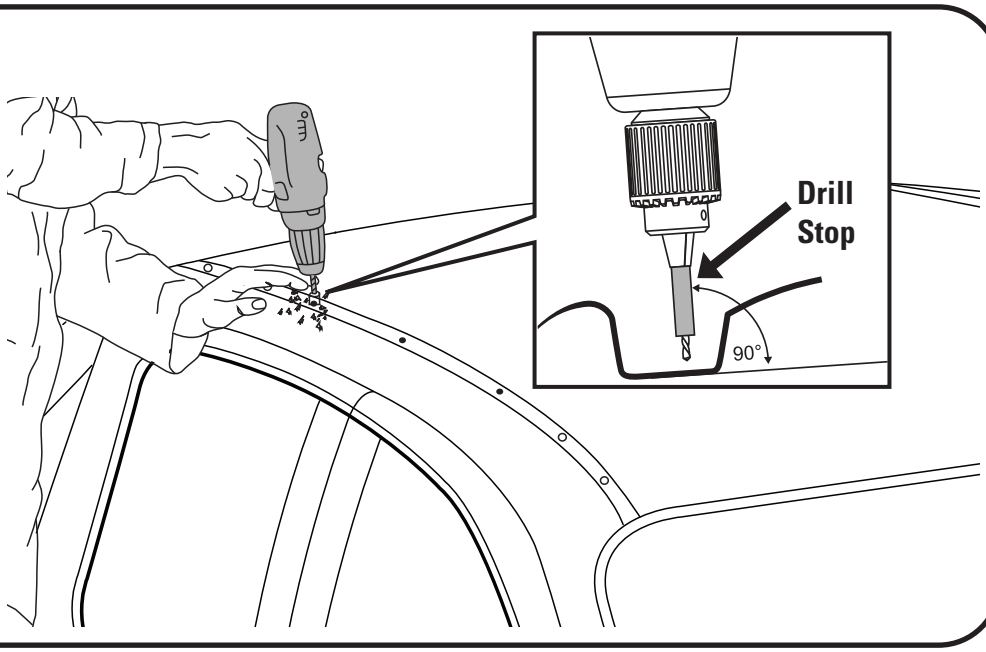

13 REMOVE SWARF

Avoid pushing swarf into the newly drilled holes by removing swarf from roof channel with a Vacuum Cleaner.

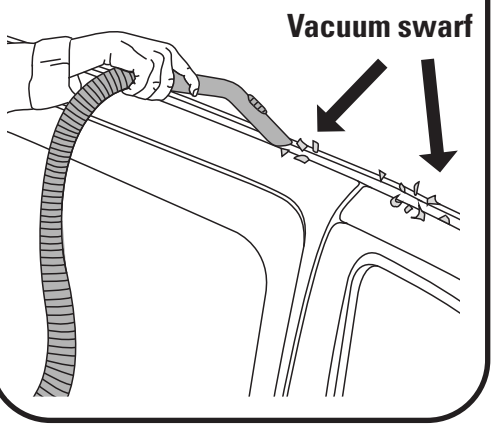

14 APPLY PROTECTIVE SEALANTS

Stage 1
Liberally apply a Zinc Rich Cold Galvanising Solution to the inside surface and surrounds of each drilled hole. Allow solution to become touch dry before proceeding with Stage 2 (approx. 10 min depending on product used).

Stage 2
Liberally apply a Mastic Silicone Sealant to the inside surface and surrounds of each hole, including the threaded M8 mounting holes.

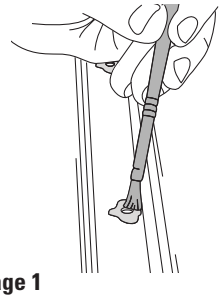

Stage 1
Apply liberally in and around holes

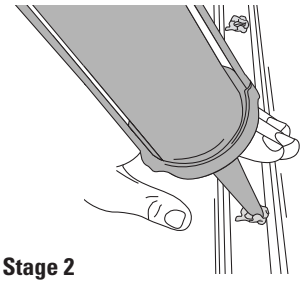

Stage 2
Apply liberally in and around holes

15 PLACE TRACK BACK INTO ROOF CHANNEL

Accurately place Tracks over drilled holes in roof channel, ensuring Track orientation is correct as shown.

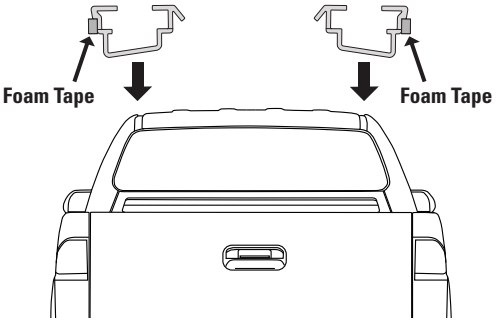

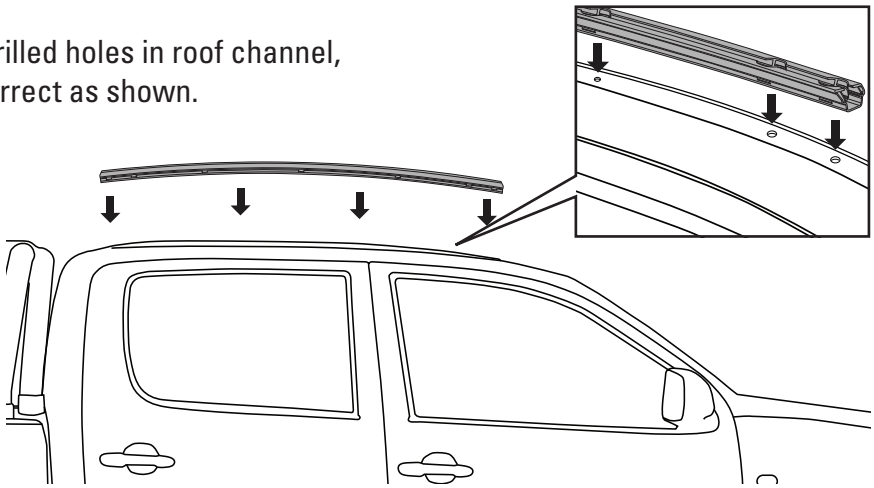

16 END CAP FITMENT

Assemble End Caps within Tracks as shown.

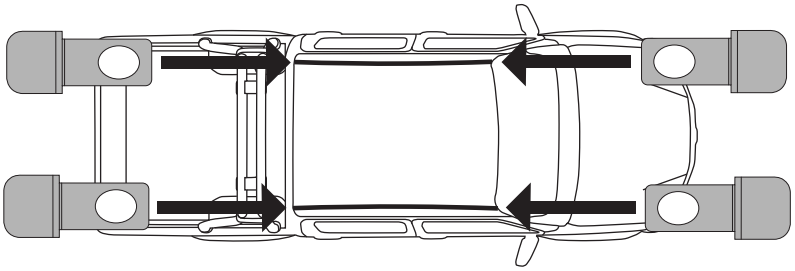

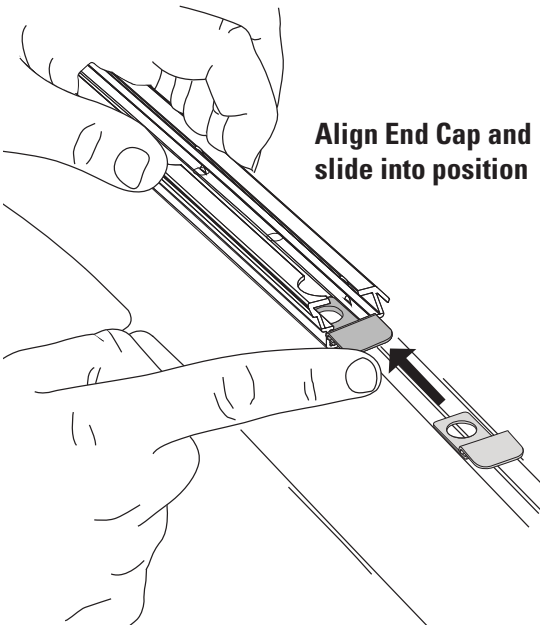

17 INSTALL M8 SCREWS AND SECURE END CAPS

Assemble 1 x M8 Spring Washer and 1 x M8 Washer onto each M8 Button Head Screw in the order shown and insert into the M8 Screw holes through Track. Tighten to 7 Nm.

For Holden Colorado / Isuzu D-Max LS, LS-U, LS-M

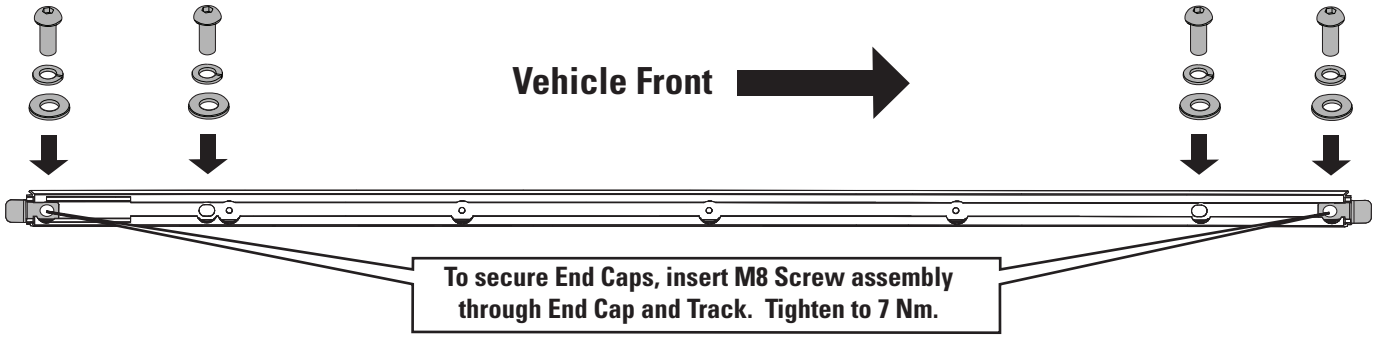

For Isuzu D-Max SX

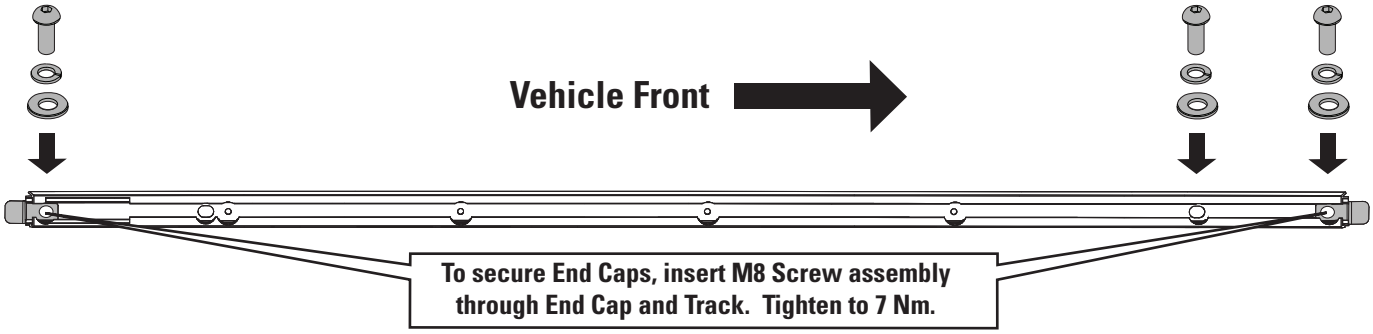

18 TRACK INSTALLATION

Align Track and insert all Rivets in their respective holes through Track into roof channel.

Using a Rivet Gun, punch each Rivet starting from the centre Rivet, then follow the numerical riveting order as shown.

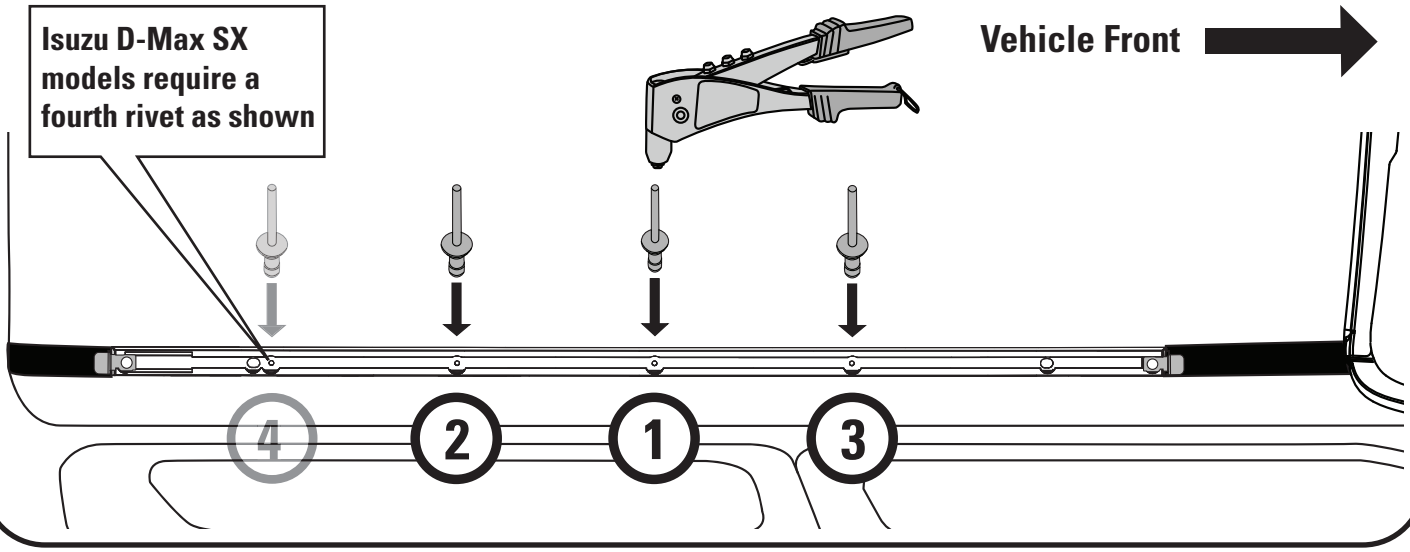

19 TRACK INSTALLATION COMPLETE

Check both Tracks are secured to the vehicle as per these installation instructions.

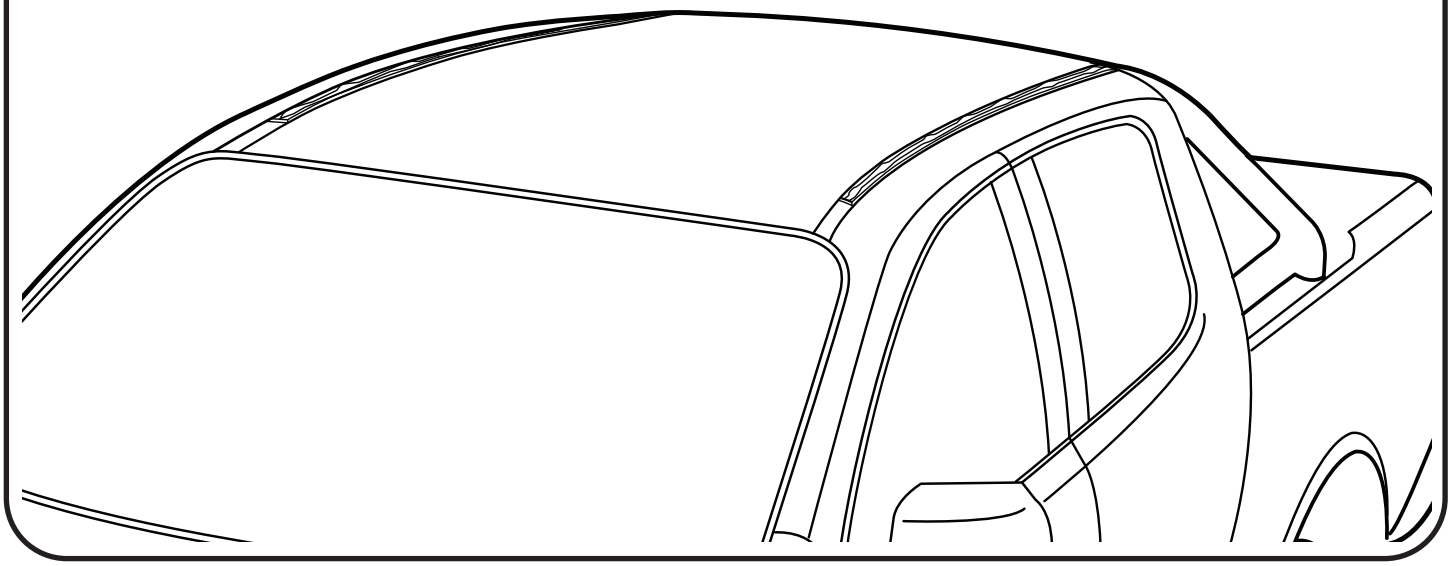

FOR ISUZU D-MAX SX SUPPLEMENT STEPS

1A SPOT DRILL MOUNTING POINTS

Place Track into roof channel, ensuring Track orientation is correct as shown.

Using a 3 mm Drill Bit (not supplied), spot drill the **centre** of the first, second and fourth M8 mounting points in the Track as shown. Ensure the Track does not move during this process by maintaining downward pressure on the Track while spot drilling holes. Use the help of an assistant if required. Once complete, remove Track taking care not to scratch vehicle.

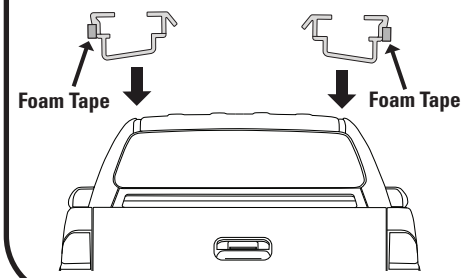

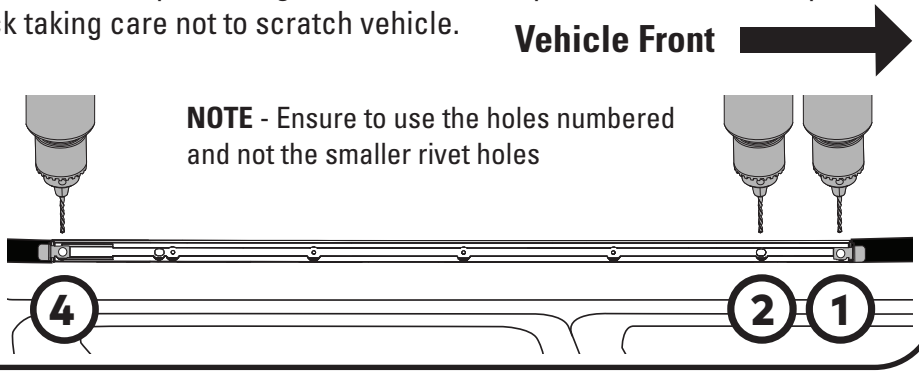

1B DRILL ROOF CHANNEL

The spot drilled Mounting Points can now be opened out using a 7 mm Drill Bit (not supplied).

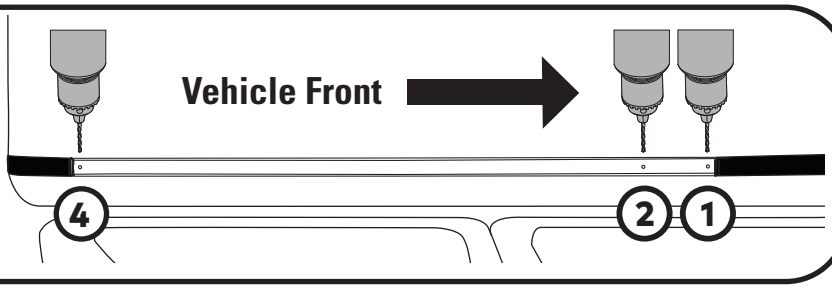

2 DIE GRIND HOLES

Die Grind the opened out holes from the previous steps. This will expose the M8 mounting points below.

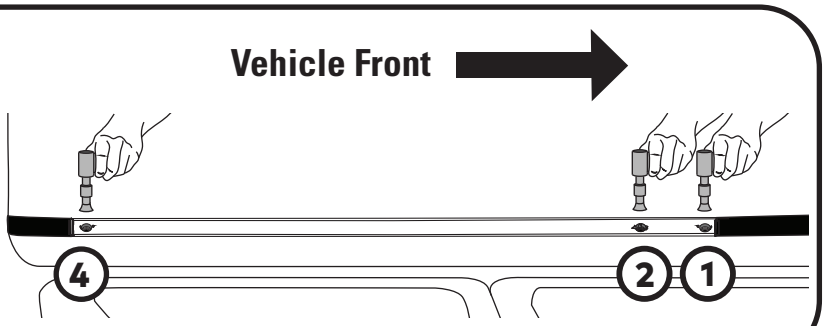

3 REMOVE SWARF

Avoid pushing swarf into the newly drilled holes by removing swarf from roof channel with a Vacuum Cleaner.

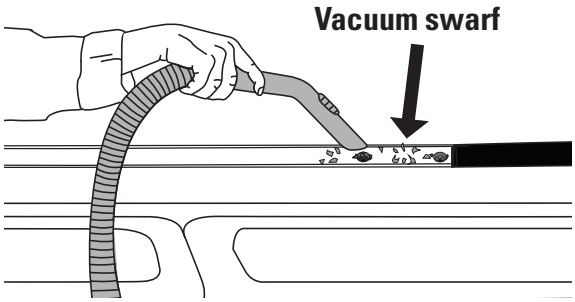

4 APPLY GALVANISING SOLUTION

Liberally apply a Zinc Rich Cold Galvanising Solution to the inside surface and surrounds of each hole. Allow solution to become touch dry (approx. 10 min depending on product used).

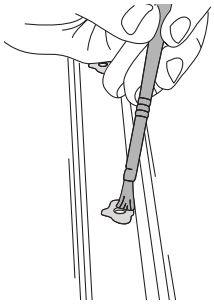

Apply liberally in and around holes

5 GO BACK TO PAGE 4 AND FOLLOW STEPS 10 - 19 TO COMPLETE TRACK INSTALLATION

LEG AND PLATFORM MOUNTING INSTRUCTIONS

1 REMOVE LEG COVERS

Using the keys supplied in the Kings Leg Kit (sold separately), remove all Leg Covers.

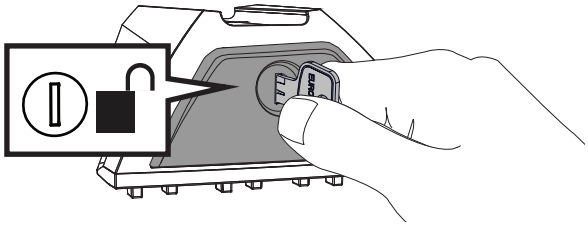

2 ASSEMBLE SCREWS

From the Leg Kit, assemble 1x M8 Washer onto each M8 Set Screw 16 mm as shown.

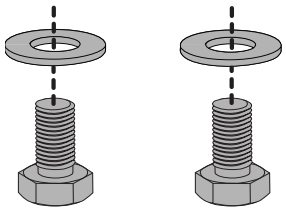

3 ASSEMBLE LEGS

Assemble each Leg as shown using 1x Leg Mounting Bracket (from Kings Platform Kit), 1x Nut Plate (from Kings Leg Kit), and the two screw assemblies from the previous step.

Tighten all M8 Set Screws to 7 Nm using a 13 mm Socket Wrench or Spanner.

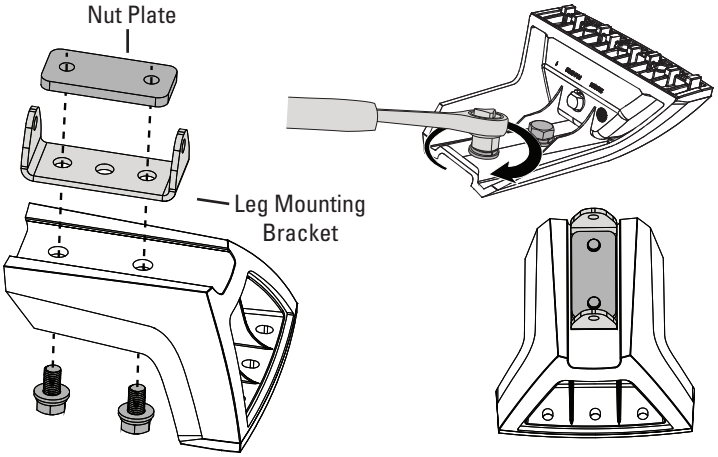

4 INSTALL MOUNTING BLOCKS

Place a Mounting Block (from Kings Platform Kit) on top of each Leg assembly, lining up the rivnut holes on Mounting Block with holes on tabs of Leg Mounting Bracket.

Secure with 2x M6 Capscrews 16 mm with Washer as shown (from Kings Platform Kit).

Tighten all Capscrews to 4 Nm with a 4 mm Ball End Allen Key or a suitable Torque Wrench.

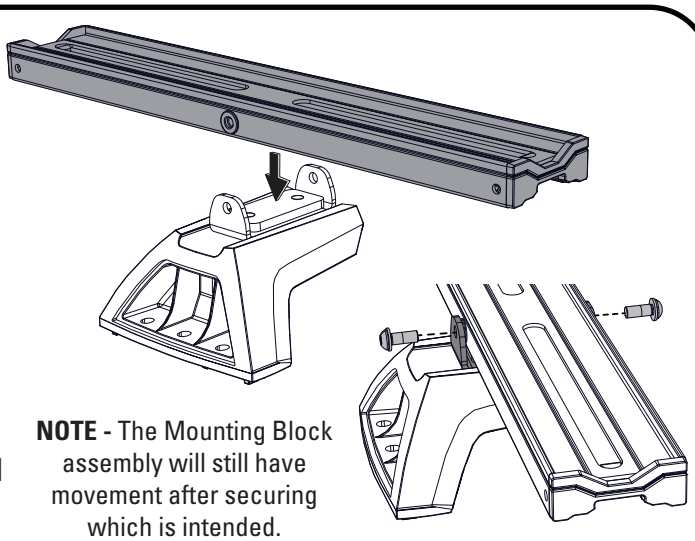

NOTE - The Mounting Block assembly will still have movement after securing which is intended.

5 LEG LOCATION

IMPORTANT: Before beginning Leg installation, identify where along the Track you want the Platform fitted. We recommend spacing between 700 mm - 1000 mm apart.

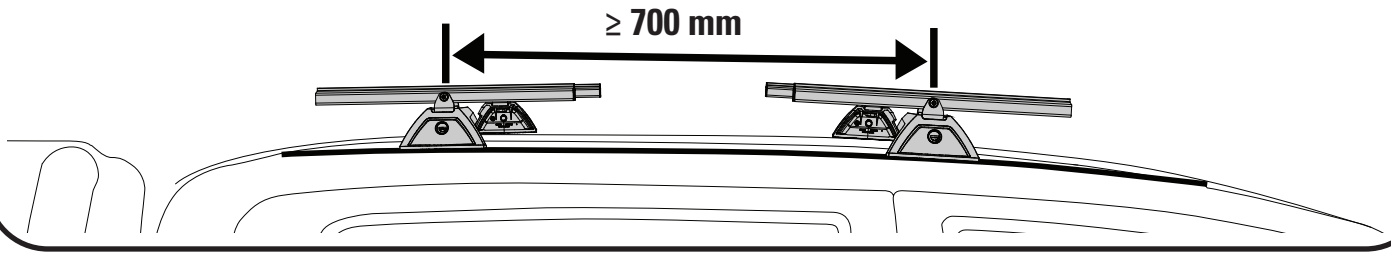

6 INSERT NUT PLATES

Run all M6 Hex Screws through Nut Plates to remove burrs.

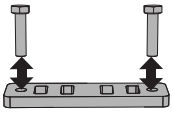

Insert 2x Nut Plates into each Track as shown.

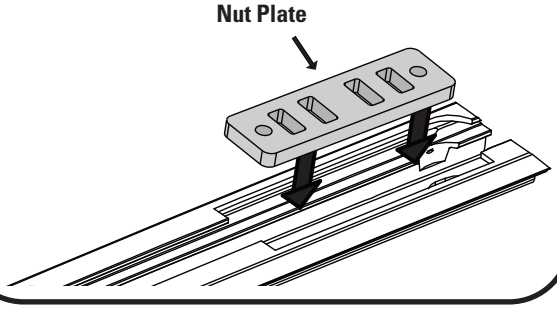

7 LEG FITMENT

Slide Nut Plates within Track into position for Leg placement. Place Leg assembly onto Tracks, carefully locating the four central raised notches on base of Legs into the cut outs on Nut Plates as shown. Repeat for remaining Legs.

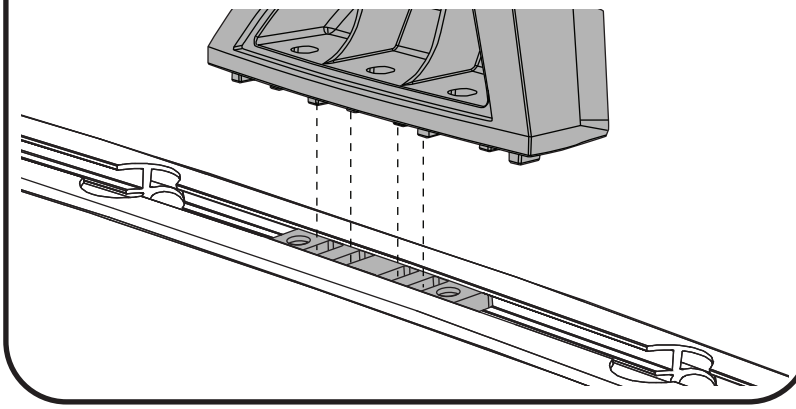

8 SECURE LEGS TO TRACKS

Assemble 1x M6 Spring Washer and 1x M6 Washer onto each M6 Hex Screw as shown. Insert through the outer holes on Legs into Nut Plate as shown.

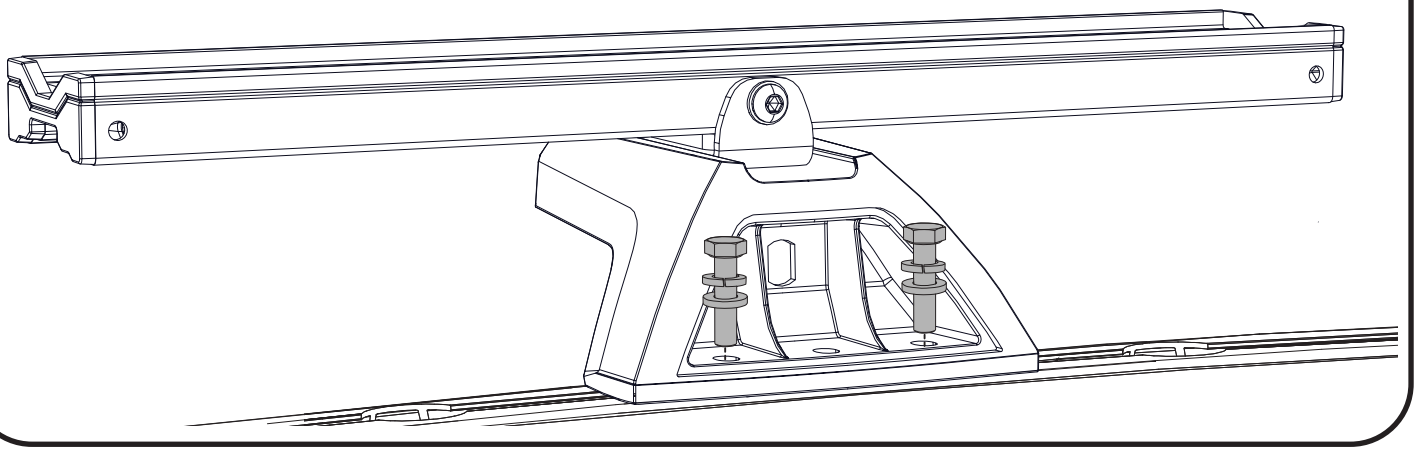

9 TIGHTEN SCREWS

Tighten all M6 Hex Screws to 5 Nm using a 10 mm Open Ended Spanner

Do not over tighten.

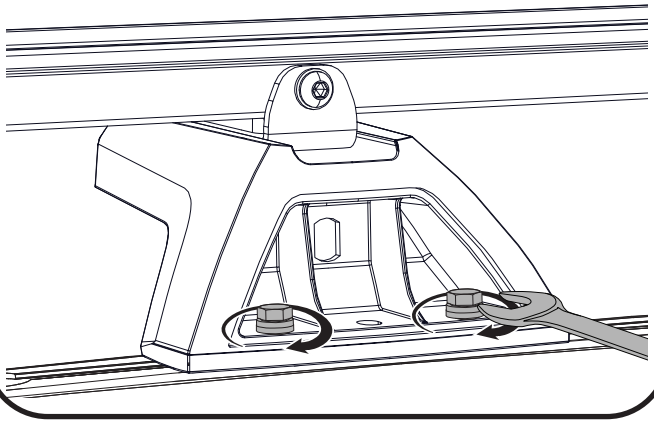

10 CHECK LEGS ARE SECURE

Check all Legs are secure.

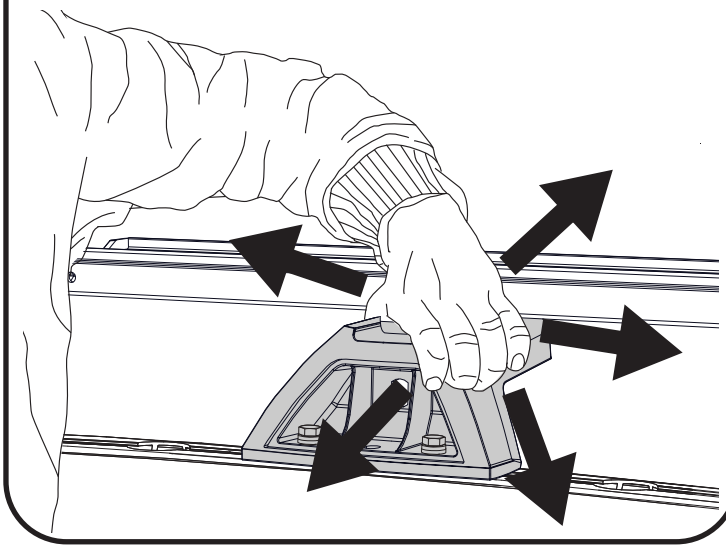

11 FIT LEG COVERS

Using the Keys and Covers supplied in the Kings Leg Kit, fit and lock all Leg Covers.

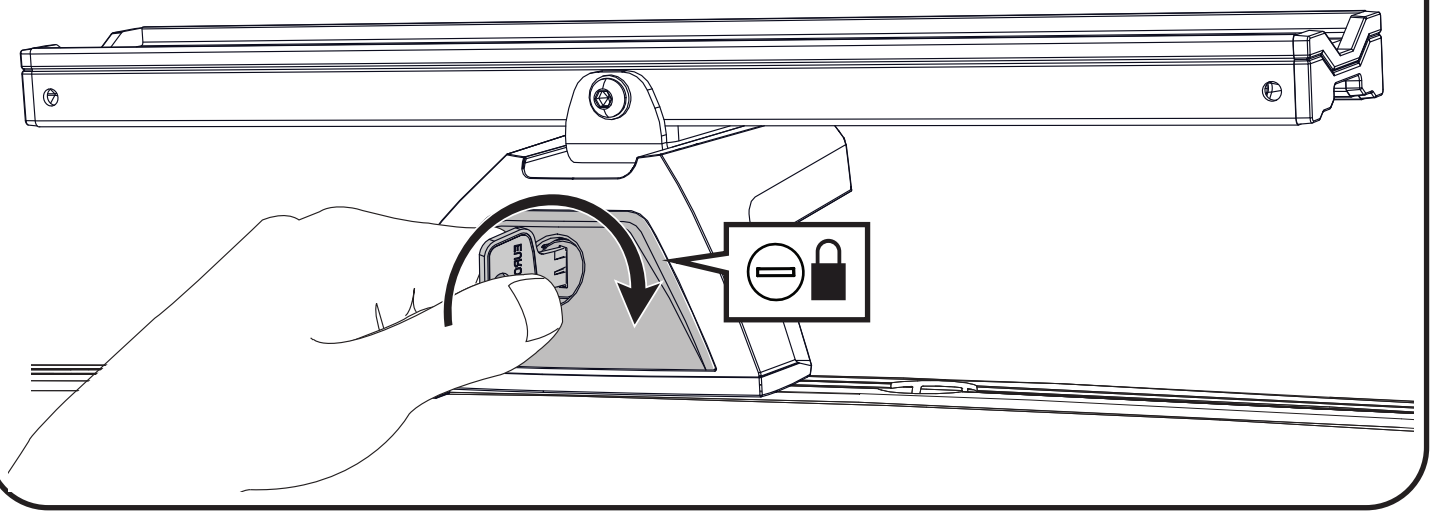

12 LIFT PLATFORM ONTO VEHICLE

With the help of an assistant, carefully lift Platform up and onto Mounting Blocks on vehicle roof. Centre Platform evenly on Legs so there is an equal overhang on sides and ideally on the front and rear.

NOTE - Wind Deflector is to be at the front of the vehicle.

NOTE - For hatch vehicles ensure to position the Platform so that there is adequate hatch clearance when fully opened.

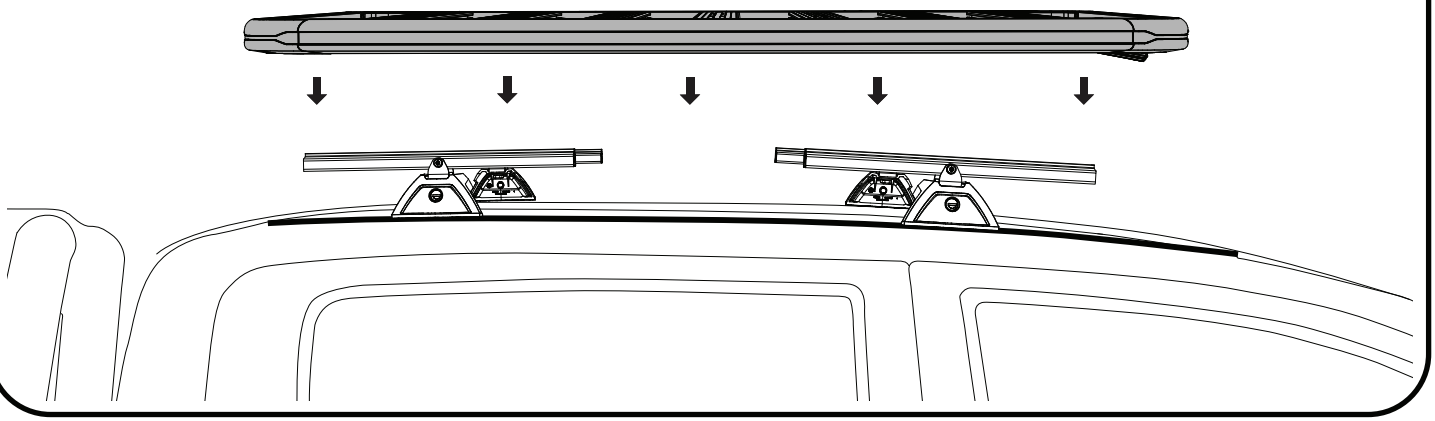

13 MAXIMUM OVERHANG

The maximum unsupported distance from Mounting Block is ONE slat on either end as shown.

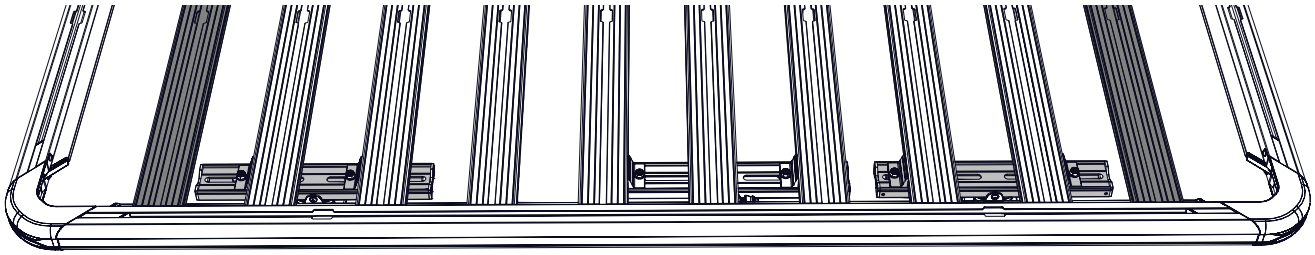

14 INSERT T-BOLTS INTO MOUNTING BLOCKS

Insert 1x M8 T-Bolt (from Kings Platform Kit) into Mounting Block channel on either side of each Leg. Twist to lock into place. The larger the distance between each pair of M8 T-Bolts the better. See images for possible location scenarios:

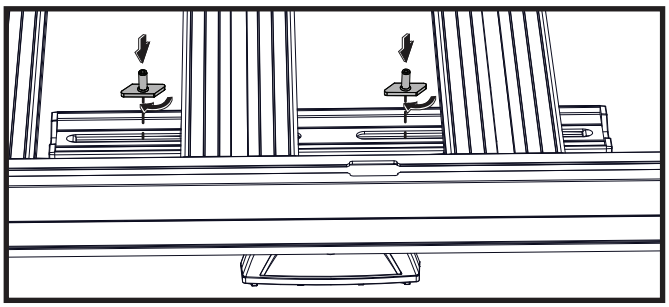

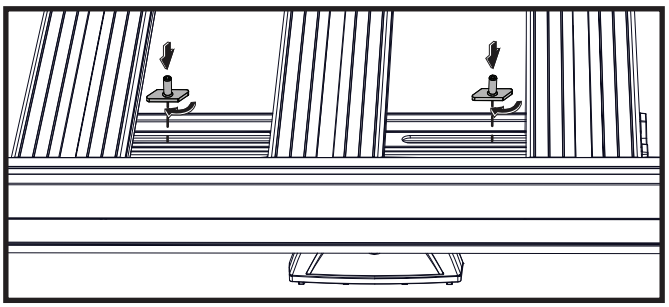

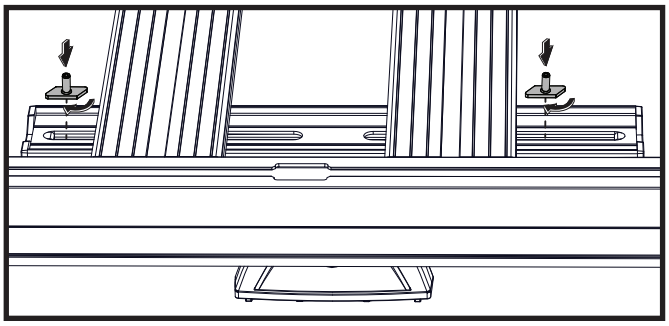

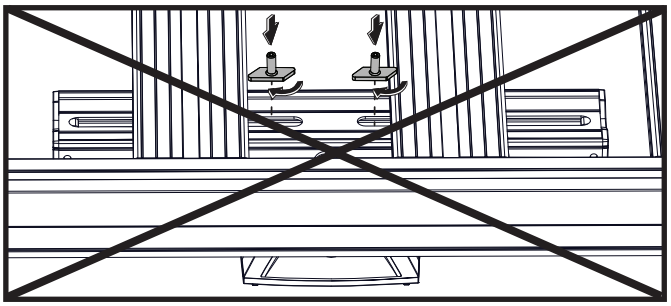

Do not use this configuration

15 SECURE MOUNTING BLOCKS

Secure Mounting Blocks to Platform Slats using 1x Slat Clamp, 1x M8 Washer and 1x M8 Nylon-Insert Lock Nut onto each M8 T-Bolt from Kings Platform Kit as shown.

Tighten all Nuts to 7 Nm using a 13 mm Socket Wrench or Spanner.

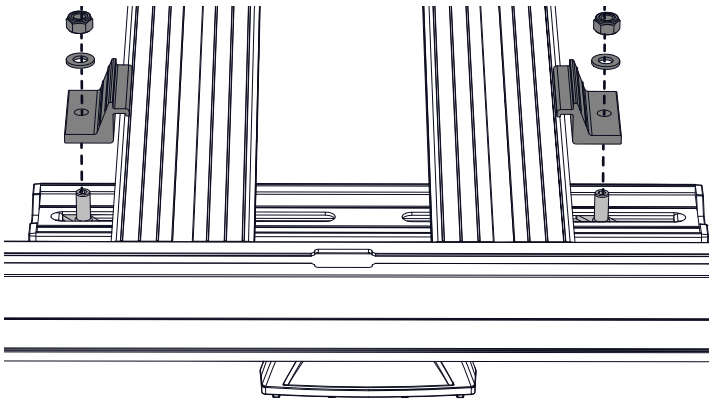

NOTE - Do not to over tighten Slat Clamps past 7 Nm as this may reduce clamping force.

16 PLATFORM MOUNTING COMPLETE

Check that Platform has been secured correctly as per the mounting instructions.

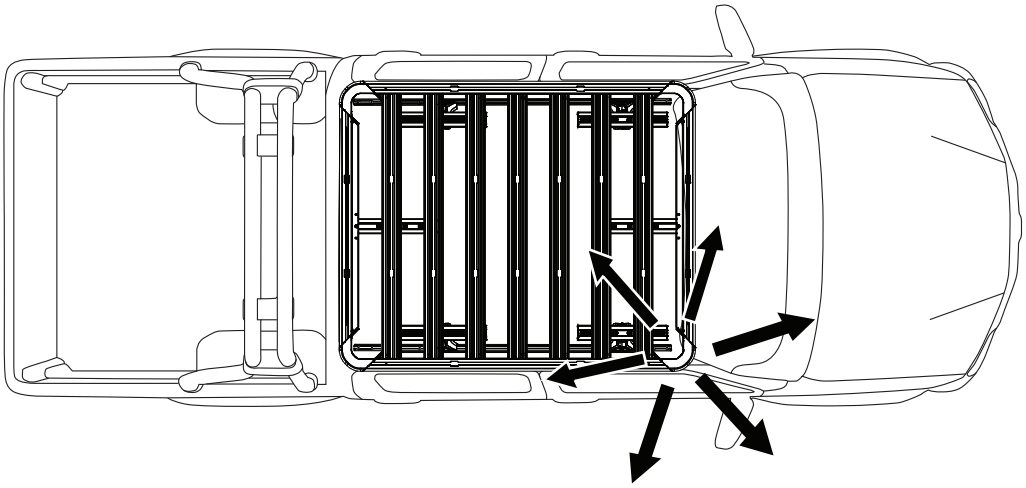

WIND DEFLECTOR REMOVAL

NOTE - The Wind Deflector can be removed to suit certain anchors/accessories to be used with the front extrusion. This is done by simply peeling the part out of the slot, starting at one end and working across the length of the deflector.

Installation is the reverse and should be confirmed by hearing an audible 'CLICK' when the deflector is fully installed.

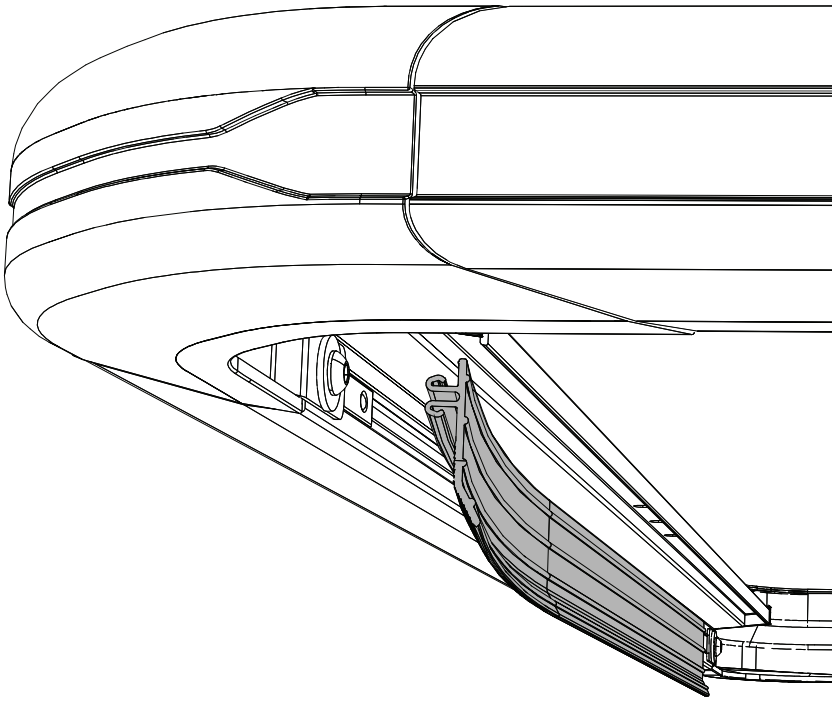

24 MONTH LIMITED
WARRANTY

WARRANTY PERIOD:
Full 24 month warranty from date of purchase against all manufacturing defects.

WHAT DOES THE WARRANTY COVER?
Under normal usage conditions, this warranty covers:

a. Any defect in design or manufacture which results in the product failing to perform substantially as described in authorised advertising or literature.

b. We will either repair or replace the product at our discretion providing that the fault is found to have been caused by a design or manufacturing defect and not misuse or tampering.

Our goods come with guarantees that cannot be excluded under the Australian Consumer Law. You are entitled to a replacement or refund for a major failure and for compensation for any other reasonably foreseeable loss or damage. You are also entitled to have the goods repaired or replaced if the goods fail to be of acceptable quality and the failure does not amount to a major failure. The benefits provided to you as the consumer by this warranty are in addition to other rights and remedies available to you under the law.

THE WARRANTY DOES NOT COVER:

a. Any damage resulting from improper use

b. Faulty installation or modification made during installation.

c. The cost of removing and reinstalling the product

d. Travel and /or other expenses due to customer's remote location

e. Transport charges and damage in transit. It is your responsibility to deliver and pick up your product, including any costs associated with the postage of your repair or replacement product. If you do freight your product we recommend that you insure against loss or damage.

f. Any loss directly or indirectly associated with the product failing to operate.

g. Damage caused by mould, insects, animals, misuse, incorrect operation, adverse weather, accidents and fair wear and tear

---

TO MAKE A CLAIM, PLEASE ENSURE YOU RETAIN YOUR SALES RECEIPT OF PURCHASE

CALL 1800 88 39 64

OUTDOOR SUPACENTRE PTY LTD
2 Stanley St Silverwater NSW, 2128
PHONE: 1800 88 39 64
www.4wdsupacentre.com.au